DTC	**P0136**	**Oxygen Sensor Circuit Malfunction (Bank 1 Sensor 2)**

DTC	**P0137**	**Oxygen Sensor Circuit Low Voltage (Bank 1 Sensor 2)**

DTC	**P0138**	**Oxygen Sensor Circuit High Voltage (Bank 1 Sensor 2)**

DESCRIPTION

HINT:
Sensor 2 refers to the sensor mounted behind the Three-Way Catalytic Converter (TWC) and located far from the engine assembly.
In order to obtain a high purification rate of the carbon monoxide (CO), hydrocarbon (HC) and nitrogen oxide (NOx) components in the exhaust gas, a TWC is used. For the most efficient use of the TWC, the air-fuel ratio must be precisely controlled so that it is always close to the stoichiometric air-fuel level. For the purpose of helping the ECM to deliver accurate air-fuel ratio control, a Heated Oxygen (HO2) sensor is used.
The HO2 sensor is located behind the TWC, and detects the oxygen concentration in the exhaust gas. Since the sensor is integrated with the heater that heats the sensing portion, it is possible to detect the oxygen concentration even when the intake air volume is low (the exhaust gas temperature is low).
When the air-fuel ratio becomes lean, the oxygen concentration in the exhaust gas is rich. The HO2 sensor informs the ECM that the post-TWC air-fuel ratio is lean (low voltage, i.e. less than 0.45 V).
Conversely, when the air-fuel ratio is richer than the stoichiometric air-fuel level, the oxygen concentration in the exhaust gas becomes lean. The HO2 sensor informs the ECM that the post-TWC air-fuel ratio is rich (high voltage, i.e. more than 0.45 V). The HO2 sensor has the property of changing its output voltage drastically when the air-fuel ratio is close to the stoichiometric level.
The ECM uses the supplementary information from the HO2 sensor to determine whether the air-fuel ratio after the TWC is rich or lean, and adjusts the fuel injection time accordingly. Thus, if the HO2 sensor is working improperly due to internal malfunctions, the ECM is unable to compensate for deviations in the primary air-fuel ratio control.

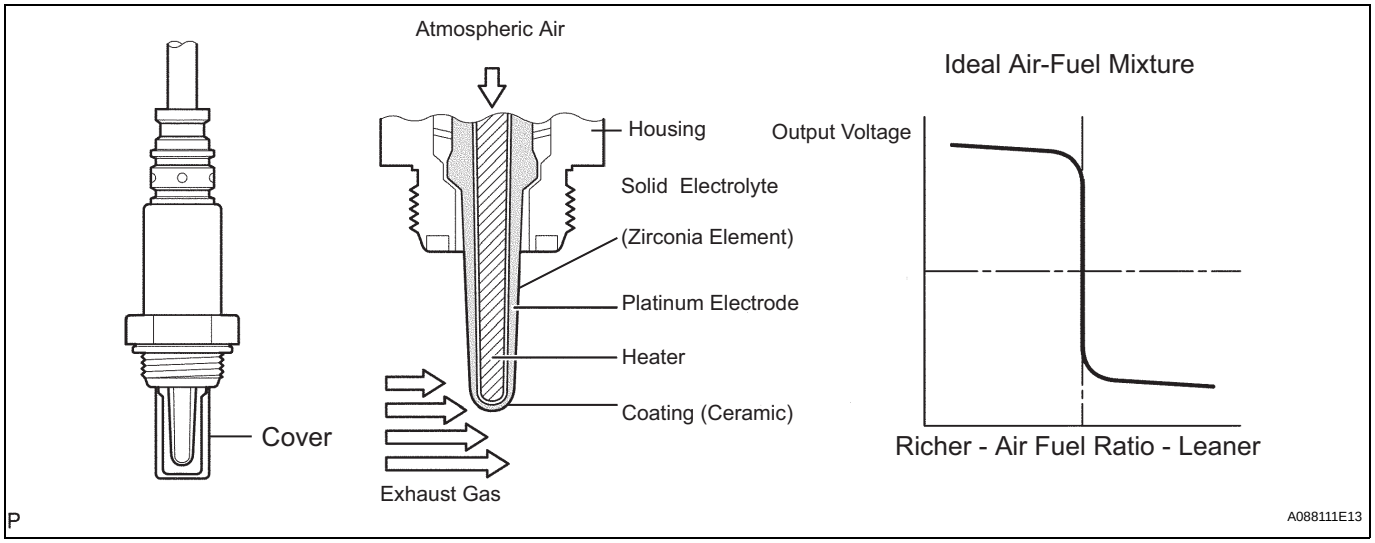

cardiagn.com

DTC No.	DTC Detection Conditions	Trouble Areas
P0136	• Abnormal voltage output: During active air-fuel ratio control, following conditions (a) and (b) met for certain period of time (1 trip detection logic): (a) Heated Oxygen (HO2) sensor voltage does not decrease to less than 0.2 V (b) HO2 sensor voltage does not increase to more than 0.6 V • Low impedance: Sensor impedance less than 5 Ω for more than 30 seconds when ECM presumes sensor to being warmed up and operating normally (1 trip detection logic)	• Open or short in HO2 sensor (sensor 2) circuit • HO2 sensor (sensor 2) • HO2 sensor heater (sensor 2) • Air-Fuel Ratio (A/F) sensor (sensor 1) • EFI relay • Gas leakage from exhaust system
P0137	• Low voltage (open): During active air-fuel ratio control, following conditions (a) and (b) met for certain period of time (1 trip detection logic): (a) HO2 sensor voltage output less than 0.21 V (b) Target air-fuel ratio rich • High impedance: Sensor impedance 15 kΩ or more for more than 90 seconds when ECM presumes sensor to being warmed up and operating normally (1 trip detection logic)	• Open in HO2 sensor (sensor 2) circuit • HO2 sensor (sensor 2) • HO2 sensor heater (sensor 2) • EFI relay • Gas leakage from exhaust system
P0138	• High voltage (short): During active air-fuel ratio control, following conditions (a) and (b) met for certain period of time (1 trip detection logic): (a) HO2 sensor voltage output 0.59 V or more (b) Target air-fuel ratio lean • Extremely high voltage (short): HO2 sensor voltage output exceeds 1.2 V for more than 30 seconds (1 trip detection logic)	• Short in HO2 sensor (sensor 2) circuit • HO2 sensor (sensor 2) • ECM internal circuit malfunction

ES

MONITOR DESCRIPTION

Active Air-Fuel Ratio Control

The ECM usually performs air-fuel ratio feedback control so that the Air-Fuel Ratio (A/F) sensor output indicates a near stoichiometric air-fuel level. This vehicle includes active air-fuel ratio control in addition to regular air-fuel ratio control. The ECM performs active air-fuel ratio control to detect any deterioration in the Three-Way Catalytic Converter (TWC) and Heated Oxygen (HO2) sensor malfunctions (refer to the diagram below).

Active air-fuel ratio control is performed for approximately 15 to 20 seconds while driving with a warm engine. During active air-fuel ratio control, the air-fuel ratio is forcibly regulated to become lean or rich by the ECM. If the ECM detects a malfunction, one of the following DTCs is set: DTC P0136 (abnormal voltage output), P0137 (open circuit) and P0138 (short circuit).

Abnormal Voltage Output of HO2 Sensor (DTC P0136)

While the ECM is performing active air-fuel ratio control, the air-fuel ratio is forcibly regulated to become rich or lean. If the sensor is not functioning properly, the voltage output variation is small. For example, when the HO2 sensor voltage does not decrease to less than 0.21 V and does not increase to more than 0.59 V during active air-fuel ratio control, the ECM determines that the sensor voltage output is abnormal and sets DTC P0136.

cardiagn.com

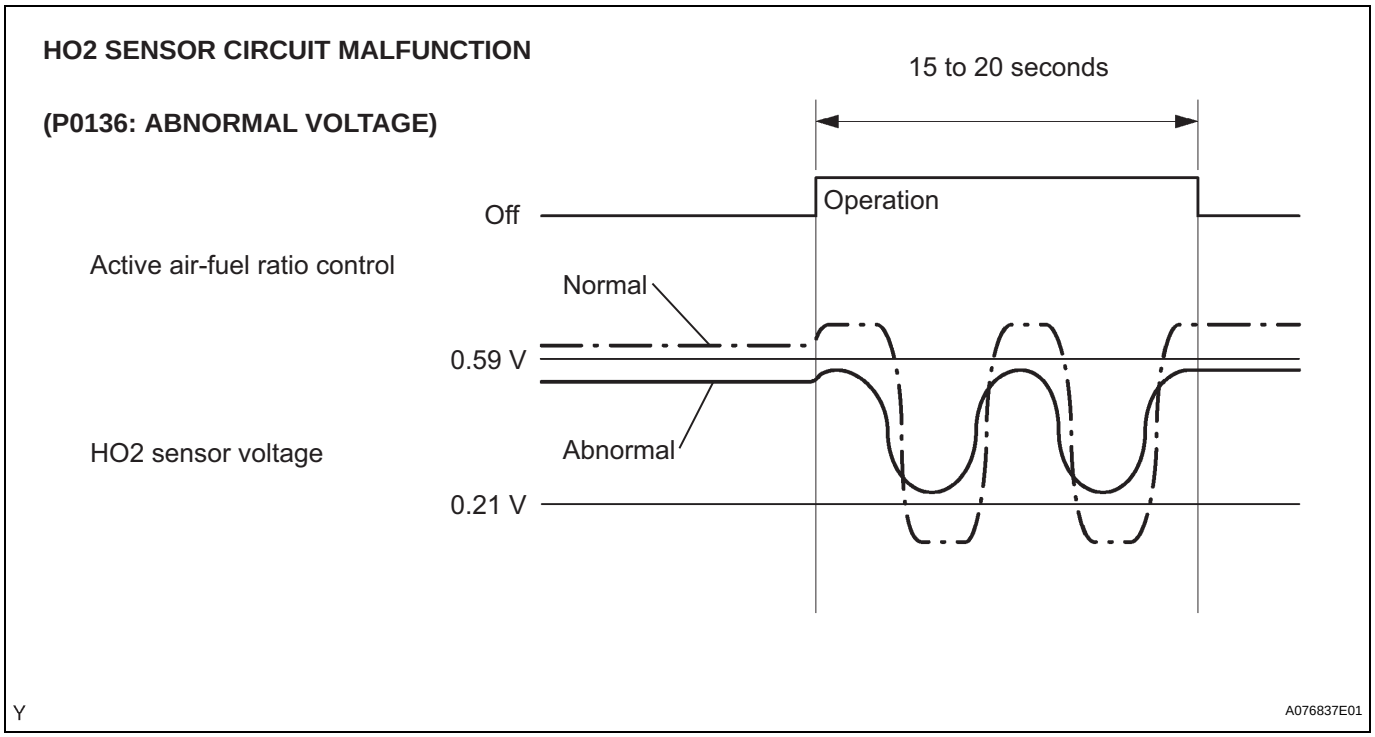

Open or Short in the Heated Oxygen (HO2) Sensor Circuit (DTC P0137 or P0138)

During active air-fuel ratio control, the ECM calculates the Oxygen Storage Capacity (OSC)* of the Three-Way Catalytic Converter (TWC) by forcibly regulating the air-fuel ratio to become rich or lean.

If the HO2 sensor has an open or short, or the voltage output of the sensor noticeably decreases, the OSC indicates an extraordinarily high value. Even if the ECM attempts to continue regulating the air-fuel ratio to become rich or lean, the HO2 sensor output does not change.

While performing active air-fuel ratio control, when the target air-fuel ratio is rich and the HO2 sensor voltage output is 0.21 V or less (lean), the ECM interprets this as an abnormally low sensor output voltage and sets DTC P0137. When the target air-fuel ratio is lean and the voltage output is 0.59 V or more (rich) during active air-fuel ratio control, the ECM determines that the sensor voltage output is abnormally high, and sets DTC P0138.

HINT:

DTC P0138 is also set if the HO2 sensor voltage output is more than 1.2 V for 30 seconds or more.

*: The TWC has the capability to store oxygen. The OSC and the emission purification capacity of the TWC are mutually related. The ECM determines whether the catalyst has deteriorated, based on the calculated OSC value (See page ES-192).

cardiagn.com

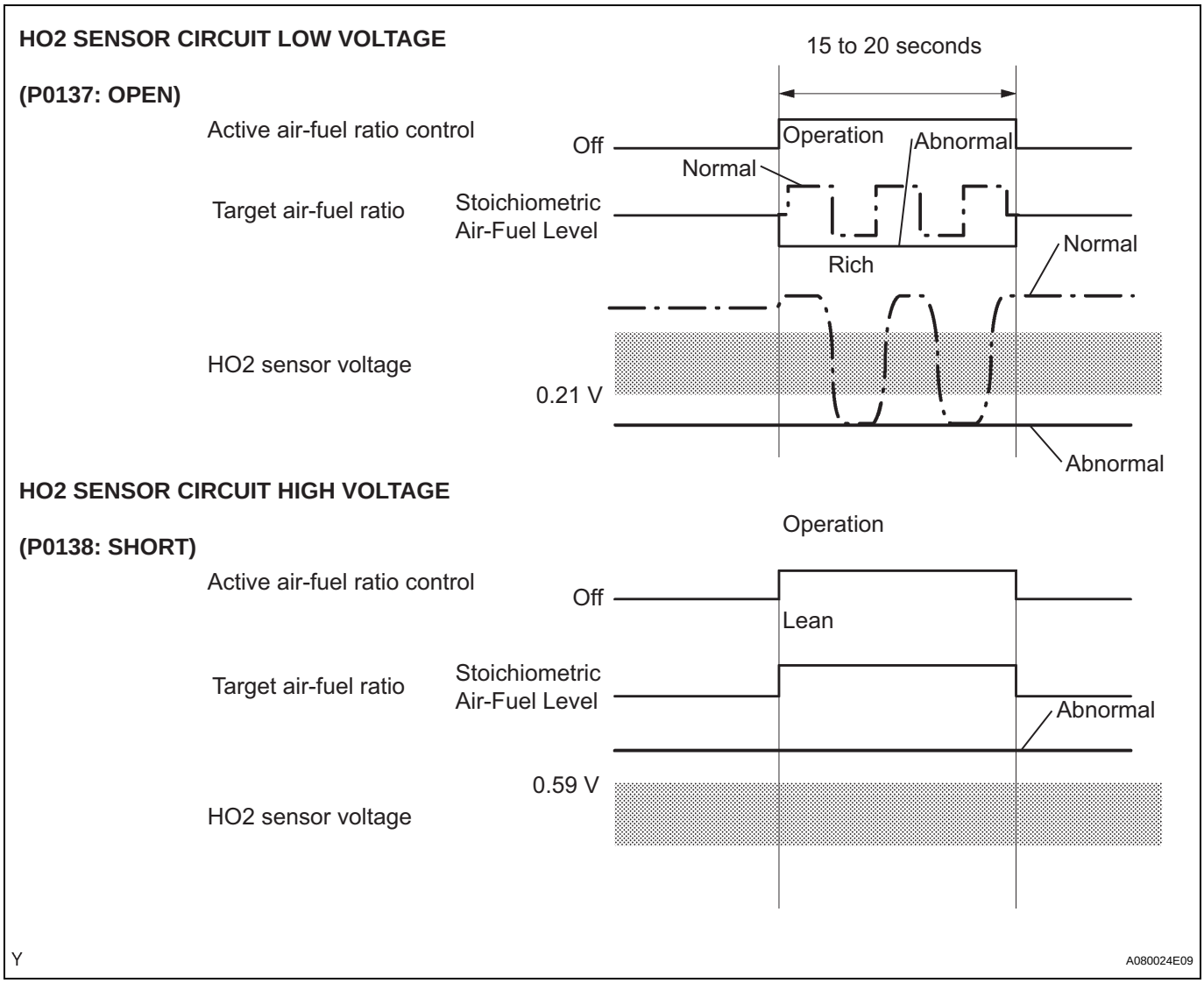

High or Low Impedance of Heated Oxygen (HO2) Sensor (DTC P0136 or P0137)

During normal air-fuel ratio feedback control, there are small variations in the exhaust gas oxygen concentration. In order to continuously monitor the slight variation of the HO2 sensor signal while the engine is running, the impedance* of the sensor is measured by the ECM. The ECM determines that there is a malfunction in the sensor when the measured impedance deviates from the standard range.

*: The effective resistance in an alternating current electrical circuit.

cardiagn.com

Interrelation between temperature of element and impedance:

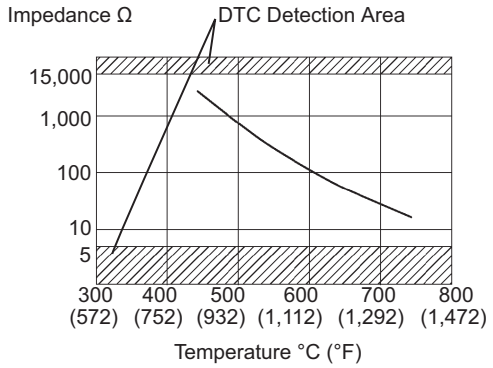

HINT:
- The impedance can not be measured using an ohmmeter.
- DTC P0136 indicates the deterioration of the HO2 sensor. The ECM sets the DTC by calculating the impedance of the sensor when the typical enabling conditions are satisfied (1 driving cycle).
- DTC P0137 indicates an open or short circuit in the HO2 sensor (1 driving cycle). The ECM sets this DTC when the impedance of the sensor exceeds the threshold 15 kΩ.

MONITOR STRATEGY

Related DTCs	P0136: Heated oxygen sensor output voltage (Output voltage) P0136: Heated oxygen sensor impedance (Low) P0137: Heated oxygen sensor output voltage (Low voltage) P0137: Heated oxygen sensor impedance (High) P0138: Heated oxygen sensor output voltage (High voltage) P0138: Heated oxygen sensor output voltage (Extremely high) P0138: Heated oxygen sensor out of range
Required Sensors/Components (Main)	Heated oxygen sensor
Required Sensors/Components (Related)	Crankshaft position sensor, engine coolant temperature sensor, mass air flow meter and throttle position sensor
Frequency of Operation	Once per driving cycle: Active air-fuel ratio control detection Continuous: Others
Duration	90 seconds: Heated oxygen sensor impedance (High) Within 20 seconds: Active air-fuel ratio control detection 10 seconds: Heated oxygen sensor out of range 30 seconds: Others
MIL Operation	Immediate
Sequence of Operation	None

TYPICAL ENABLING CONDITIONS

All:

The monitor will run whenever the following DTCs are not present	P0031, P0032, P0051, P0052 (O2 sensor heater sensor 1), P0100-P0103 (MAF sensor), P0105-P0108 (MAP sensor), P0110-P0113 (IAT sensor), P0115-P0118 (ECT sensor), P0120-P0223, P2135 (TP sensor), P0125 (Insufficient ECT for closed loop), P0134, P0154 (O2 sensor, A/F sensor (No activity) sensor 1), P0171-P0175 (Fuel system), P0300-P0308 (Misfire), P0335 (CKP sensor), P0340, P0341 (CMP sensor), P0385 (CKP sensor 2), P0402 (EGR system (Open)), P0442-P0456 (EVAP system), P0500 (VSS), P0511 (IAT valve), P0510 (Idle switch), P2226 (BARO sensor), P2440 (A/R control valve stuck open), P2441 (A/R control valve stuck close), P2444 (AIP stuck ON), P2445 (AIP stuck OFF)

Heated Oxygen Sensor Output Voltage (Output Voltage, High Voltage and Low Voltage):

Active A/F control	Performing

cardiagn.com

Active A/F control is performed when the following conditions are met:	-
Battery voltage	11 V or more
ECT	75°C (167°F) or more
Idle	OFF
Engine RPM	Less than 4,000 rpm
A/F sensor status	Activated
Fuel cut	OFF
Engine load	10 to 80 %
Shift position	3rd or more

Heated Oxygen Sensor Impedance (Low):

Battery voltage	11 V or more
Estimated rear oxygen sensor temperature	Less than 700°C (1,292°F)
P0606	Not set

Heated Oxygen Sensor Impedance (High):

Battery voltage	11 V or more
Estimated rear oxygen sensor temperature	450°C (842°F) or more
P0606	Not present

Heated Oxygen Sensor Output Voltage (Extremely High), Heated Oxygen Sensor Out of Range:

Engine	Running
Battery voltage	11 V or more

TYPICAL MALFUNCTION THRESHOLDS

Heated Oxygen Sensor Output Voltage (Output voltage):

Either of following conditions is met:	Condition 1 or 2
1. All of following conditions are met:	Condition (a), (b) and (c)
(a) Commanded air-fuel ratio	14.3 or less
(b) Rear oxygen sensor voltage	0.21 to 0.59 V
(c) Oxygen storage capacity of catalyst	2 g or more
2. All of following conditions are met:	Conditions (d), (e) and (f)
(d) Commanded air-fuel ratio	14.9 or more
(e) Rear oxygen sensor voltage	0.21 to 0.59 V
(f) Oxygen storage capacity of catalyst	2 g or more

Heated Oxygen Sensor Output Voltage (Low output voltage):

Commanded air-fuel ratio	14.3 or less
Rear oxygen sensor voltage	Less than 0.21 V
Oxygen storage capacity catalyst	2 g or more

Heated Oxygen Sensor Output Voltage (High output voltage):

Commanded air-fuel ratio	14.9 or more
Rear oxygen sensor voltage	More than 0.59 V
Oxygen storage capacity catalyst	2 g or more

Heated Oxygen Sensor Impedance (Low):

Duration of following condition	10 seconds or more
Rear oxygen sensor voltage	1.2 V or more

Heated Oxygen Sensor Impedance (High):

Duration of following condition	30 seconds or more
Rear oxygen sensor impedance	Less than 5 Ω

cardiagn.com

Heated Oxygen Sensor Output Voltage (Extremely High):

Duration of following condition	90 seconds or more
Rear oxygen sensor impedance	15 kΩ or more

Heated Oxygen Sensor Out of Range:

Duration of following condition	10 seconds or more
Rear oxygen sensor voltage	1.2 V or more

COMPONENT OPERATING RANGE

Heated oxygen sensor voltage	Varies between 0.1 and 0.9 V

O2S TEST RESULT

Refer to O2S TEST RESULT (See page ES-13).

Test ID	Test Item	Description	Unit Conversion	Unit	Standard Value
$07	Output Voltage	Minimum rear HO2 sensor output voltage	Multiply by 0.005	V	Less than TEST LIMIT
$08	Output Voltage	Maximum rear HO2 sensor output voltage	Multiply by 0.005	V	More than TEST LIMIT
$91	OSC	Maximum OSC in catalytic converter	Multiply by 0.0156	g	Less than TEST LIMIT

If the sensor voltage is outside the standard values, the ECM interprets this as a malfunction and sets a DTC.

cardiagn.com

WIRING DIAGRAM

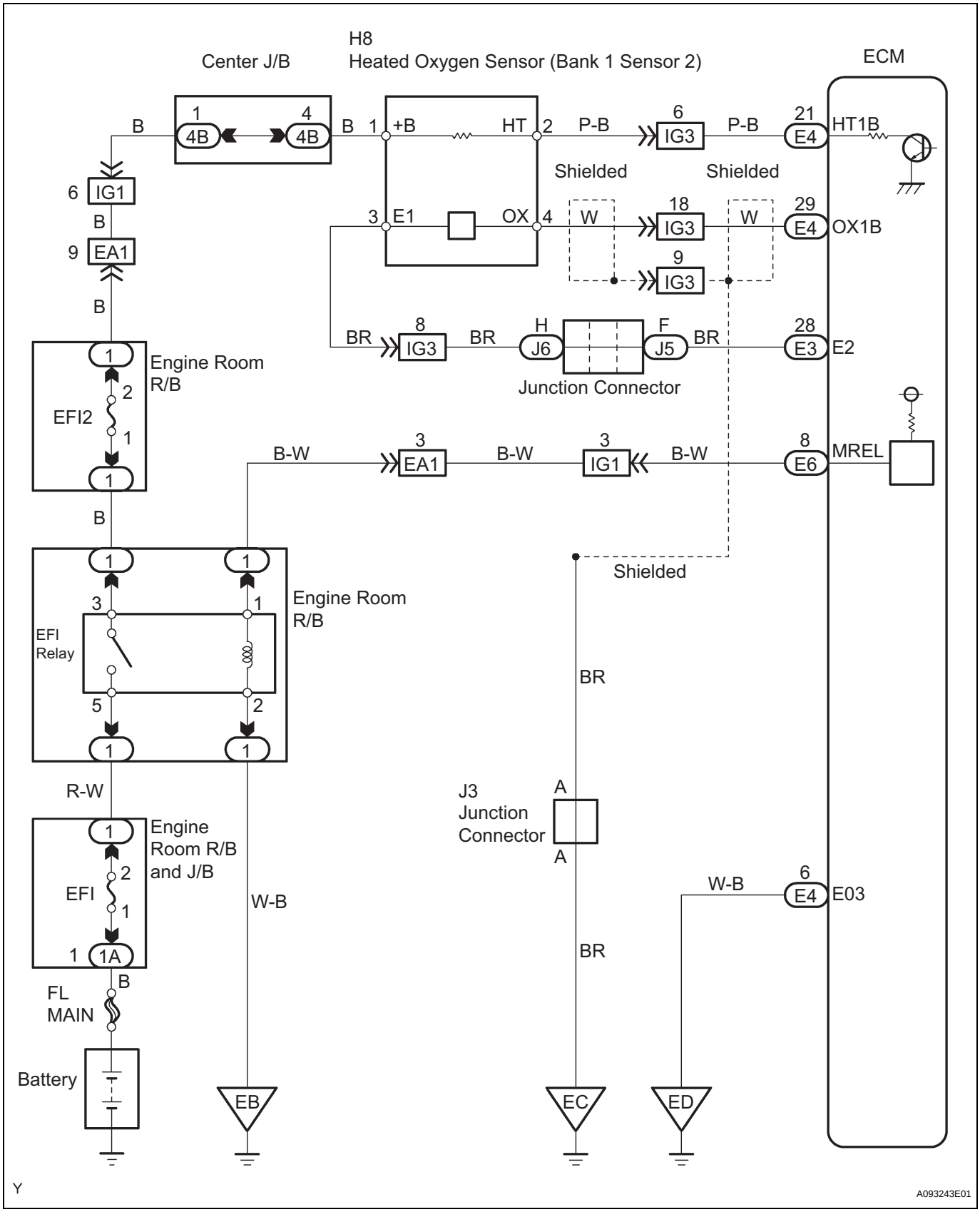

cardiagn.com

CONFIRMATION DRIVING PATTERN

HINT:

- This confirmation driving pattern is used in steps 5, 8 and 11 of the following diagnostic troubleshooting procedure when using either an intelligent tester or OBD II scan tool.
- Performing this confirmation pattern will activate the Heated Oxygen (HO2) sensor monitor. (The catalyst monitor is performed simultaneously.) This is very useful for verifying the completion of a repair.

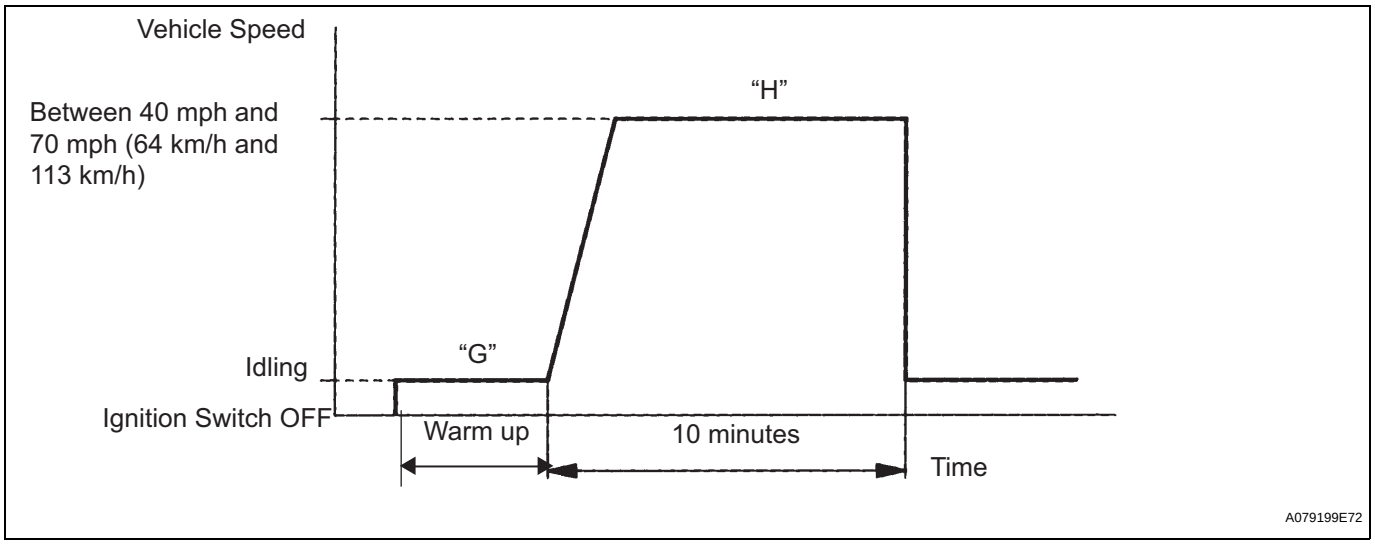

NOTICE:

This test will not be completed if the vehicle is driven under absolutely constant speed conditions such as with cruise control activated.

HINT:

Even if the vehicle stops during driving pattern, the test can be resumed.

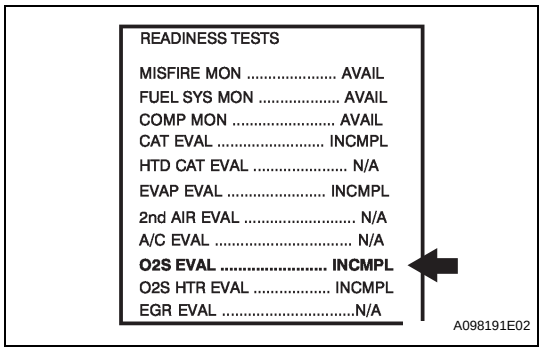

1. Driving Patterns

(a) Connect an intelligent tester or OBD II scan tool to the DLC3. (Procedure "A").

(b) Turn the ignition switch to ON (Procedure "B").

(c) Turn the tester or scan tool ON (Procedure "C").

(d) Clear DTCs (where set) (See page ES-30) (Procedure "D").

(e) If using an intelligent tester, select the following menu items: DIAGNOSIS / CARB OBD II / READINESS TESTS (Procedure "E").

(f) Check that O2S EVAL is INCMPL (incomplete) (Procedure "F").

(g) Start the engine and warm it up (Procedure "G").

(h) Drive the vehicle at between 40 mph and 70 mph (64 km/h and 113 km/h) for at least 10 minutes (Procedure "H").

(i) Note the state of the Readiness Tests items. Those items will change to COMPL (complete) as O2S EVAL monitor operates (Procedure "I").

(j) On the tester, select the following menu items: DIAGNOSIS / ENHANCED OBD II / DTC INFO / PENDING CODES and check if any DTCs (any pending DTCs) are set (Procedure "J").

HINT:

If O2S EVAL does not change to COMPL, and any pending DTCs fail to set, extend the driving time.

cardiagn.com

(k) If using an OBD II scan tool, conduct the following operations after clearing DTCs: (Procedure "K").
(1) Perform procedures "G" and "H" described above.
(2) Turn the ignition switch to OFF.
(3) Repeat procedures "G" and "H", in order to set DTCs (using 2 trip detection logic).

INSPECTION PROCEDURE

HINT:
Intelligent tester only:
Malfunctioning areas can be identified by performing the A/F CONTROL function provided in the ACTIVE TEST. The A/F CONTROL function can help to determine whether the Air-Fuel Ratio (A/F) sensor, Heated Oxygen (HO2) sensor and other potential trouble areas are malfunctioning.
The following instructions describe how to conduct the A/F CONTROL operation using an intelligent tester.

1. Connect an intelligent tester to the DLC3.
2. Start the engine and turn the tester ON.
3. Warm up the engine at an engine speed of 2,500 rpm for approximately 90 seconds.
4. On the tester, select the following menu items: DIAGNOSIS / ENHANCED OBD II / ACTIVE TEST / A/F CONTROL.
5. Perform the A/F CONTROL operation with the engine in an idling condition (press the RIGHT or LEFT button to change the fuel injection volume).
6. Monitor the voltage output of the A/F and HO2 sensors (AFS B1S1 and O2S B1S2) displayed on the tester.

HINT:
- The A/F CONTROL operation lowers the fuel injection volume by 12.5 % or increases the injection volume by 25 %.
- Each sensor reacts in accordance with increases and decreases in the fuel injection volume.

Standard voltage

Tester Display (Sensor)	Injection Volumes	Status	Voltages
AFS B1S1 (A/F)	+25 %	Rich	Less than 3.0
AFS B1S1 (A/F)	-12.5 %	Lean	More than 3.35
O2S B1S2 (HO2)	+25 %	Rich	More than 0.55
O2S B1S2 (HO2)	-12.5 %	Lean	Less than 0.4

NOTICE:
The Air-Fuel Ratio (A/F) sensor has an output delay of a few seconds and the Heated Oxygen (HO2) sensor has a maximum output delay of approximately 20 seconds.

Case	A/F Sensor (Sensor 1) Output Voltage		HO2 Sensor (Sensor 2) Output Voltage		Main Suspected Trouble Areas
Case 1	Injection Volume +25 % -12.5 %		Injection Volume +25 % -12.5 %		-
	Output Voltage More than 3.35 V Less than 3.0 V	OK	Output Voltage More than 0.55 V Less than 0.4 V	OK	
Case 2	Injection Volume +25 % -12.5 %		Injection Volume +25 % -12.5 %		• A/F sensor • A/F sensor heater • A/F sensor circuit
	Output Voltage Almost no reaction	NG	Output Voltage More than 0.55 V Less than 0.4 V	OK	

cardiagn.com

Case	A/F Sensor (Sensor 1) Output Voltage		HO2 Sensor (Sensor 2) Output Voltage		Main Suspected Trouble Areas
Case 3	Injection Volume +25 % -12.5 %		Injection Volume +25 % -12.5 %		• HO2 sensor • HO2 sensor heater • HO2 sensor circuit
	Output Voltage More than 3.35 V Less than 3.0 V	OK	Output Voltage Almost no reaction	NG	
Case 4	Injection volume +25 % -12.5 %		Injection Volume +25 % -12.5 %		• Injector • Fuel pressure • Gas leakage from exhaust system (Air-fuel ratio extremely rich or lean)
	Output Voltage Almost no reaction	NG	Output Voltage Almost no reaction	NG	

HINT:
- Following the A/F CONTROL procedure enables technicians to check and graph the voltage outputs of both the A/F and HO2 sensors.
- To display the graph, select the following menu items on the tester: DIAGNOSIS / ENHANCED OBD II / ACTIVE TEST/ A/F CONTROL / USER DATA / AFS B1S1 and O2S B1B2, and press the YES button and then the ENTER button followed by the F4 button.
- If other DTCs relating to different systems that have terminal E2 as the ground terminal are output simultaneously, terminal E2 may have an open circuit.
- Read freeze frame data using an intelligent tester or OBD II scan tool. The ECM records vehicle and driving condition information as freeze frame data the moment a DTC is stored. When troubleshooting, freeze frame data can be helpful in determining whether the vehicle was running or stopped, whether the engine was warmed up or not, whether the air/fuel ratio was lean or rich, as well as other data recorded at the time of a malfunction.
- If the OX1B wire from the ECM connector is short-circuited to the +B wire, DTC P0136 will be set.

When using intelligent tester:

1	CHECK DTC OUTPUT

(a) Connect an intelligent tester to the DLC3.
(b) Turn the ignition switch to ON and turn the tester ON.
(c) Select the following menu items: DIAGNOSIS / ENHANCED OBD II / DTC INFO / CURRENT CODES.
(d) Read DTCs.

Result

Display (DTC Output)	Proceed to
P0138	A
P0137	B
P0136	C

B → Go to step 14

C → Go to step 7

A

ES

cardiagn.com

2	READ VALUE OF INTELLIGENT TESTER (OUTPUT VOLTAGE OF HEATED OXYGEN SENSOR)

(a) Connect the intelligent tester to the DLC3.
(b) Turn the ignition switch to ON and turn the tester ON.
(c) Select the following menu items: DIAGNOSIS / ENHANCED OBD II / DATA LIST / ALL / O2S B1S2.
(d) Allow the engine to idle.
(e) Read the Heated Oxygen (HO2) sensor output voltage while idling.

Result

ES

HO2 Sensor Output Voltages	Proceed to
More than 1.2 V	A
Less than 1.0 V	B

B → **Go to step 5**

A

3	CHECK HARNESS AND CONNECTOR (CHECK FOR SHORT)

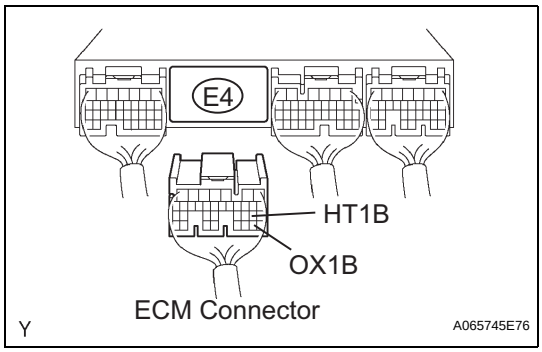

(a) Turn the ignition switch to OFF and wait for 5 minutes.
(b) Disconnect the E4 ECM connector.
(c) Check the resistance.
Standard resistance

Tester Connections	Specified Conditions
HT1B (E4-21) - OX1B (E4-29)	10 kΩ or higher

(d) Reconnect the ECM connector.

OK → **REPLACE ECM**

NG

4	INSPECT HEATED OXYGEN SENSOR (CHECK FOR SHORT)

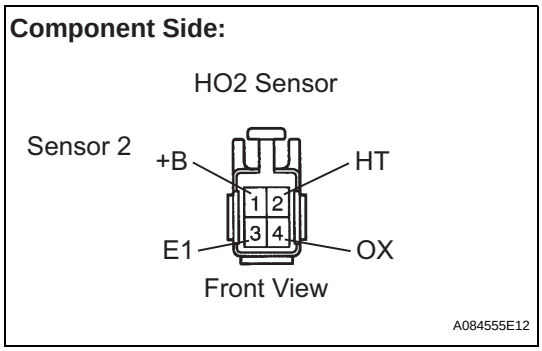

(a) Disconnect the H8 HO2 sensor connector.
(b) Check the resistance.
Standard resistance

Tester Connections	Specified Conditions
+B (1) - E1 (3)	10 kΩ or higher
+B (1) - OX (4)	10 kΩ or higher

(c) Reconnect the HO2 sensor connector.

NG → **REPLACE HEATED OXYGEN SENSOR**

OK

REPAIR OR REPLACE HARNESS OR CONNECTOR

cardiagn.com

5	PERFORM CONFIRMATION DRIVING PATTERN

NEXT

6	CHECK WHETHER DTC OUTPUT RECURS (DTC P0138)

(a) On the intelligent tester, select the following menu items: DIAGNOSIS / ENHANCED OBD II / DTC INFO / CURRENT CODES.
(b) Read DTCs.

Result

Display (DTC Output)	Proceed to
P0138	A
No output	B

B → CHECK FOR INTERMITTENT PROBLEMS

A

REPLACE HEATED OXYGEN SENSOR

7	READ VALUE OF INTELLIGENT TESTER (OUTPUT VOLTAGE OF HEATED OXYGEN SENSOR)

(a) Connect the intelligent tester to the DLC3.
(b) Turn the ignition switch to ON and turn the tester ON.
(c) Start the engine.
(d) Select the following menu items: DIAGNOSIS / ENHANCED OBD II / DATA LIST / ALL / O2S B1S2.
(e) After warming up the engine, run the engine at an engine speed of 2,500 rpm for 3 minutes.
(f) Read the output voltage of the HO2 sensor when the engine rpm is suddenly increased.
HINT:
Quickly accelerate the engine to 4,000 rpm 3 times using the accelerator pedal.
Standard voltage:
Fluctuates between 0.4 V or less and 0.5 V or more.

NG → Go to step 14

OK

8	PERFORM CONFIRMATION DRIVING PATTERN

NEXT

cardiagn.com

9	CHECK WHETHER DTC OUTPUT RECURS (DTC P0136)

(a) On the intelligent tester, select the following menu items: DIAGNOSIS / ENHANCED OBD II / DTC INFO / CURRENT CODES.
(b) Read DTCs.

Result

Display (DTC Output)	Proceed to
P0136	A
No output	B

ES

B → **CHECK FOR INTERMITTENT PROBLEMS**

A

10	REPLACE HEATED OXYGEN SENSOR

(a) Replace the heated oxygen sensor (See page EX-2).

NEXT

11	PERFORM CONFIRMATION DRIVING PATTERN

NEXT

12	CHECK WHETHER DTC OUTPUT RECURS (DTC P0136)

(a) On the intelligent tester, select the following menu items: DIAGNOSIS / ENHANCED OBD II / DTC INFO / CURRENT CODES.
(b) Read DTCs.

Result

Display (DTC Output)	Proceed to
P0136	A
No output	B

B → **REPAIR COMPLETED**

A

13	PERFORM ACTIVE TEST BY INTELLIGENT TESTER (INJECTION VOLUME)

(a) Connect the intelligent tester to the DLC3.
(b) Start the engine and turn the tester ON.
(c) Warm up the engine.
(d) Select the following menu items: DIAGNOSIS / ENHANCED OBD II / ACTIVE TEST / INJ VOL.

cardiagn.com

(e) Change the fuel injection volume using the tester, monitoring the voltage output of Air-Fuel Ratio (A/F) and HO2 sensors displayed on the tester.
HINT:
- Change the fuel injection volume within the range of -12 % and +12 %. The injection volume can be changed in 1 % graduations within the range.
- The A/F sensor is displayed as AFS B1S1, and the HO2 sensor is displayed as O2S B1S2, on the intelligent testers.

Result

Tester Display (Sensor)	Voltage Variations	Proceed to
AFS B1S1 (A/F)	Alternates between more and less than 3.3 V	OK
AFS B1S1 (A/F)	Remains at more than 3.3 V	NG
AFS B1S1 (A/F)	Remains at less than 3.3 V	NG

ES

HINT:
A normal HO2 sensor voltage (O2S B1S2) reacts in accordance with increases and decreases in fuel injection volumes. When the A/F sensor voltage remains at either less or more than 3.3 V despite the HO2 sensor indicating a normal reaction, the A/F sensor is malfunctioning.

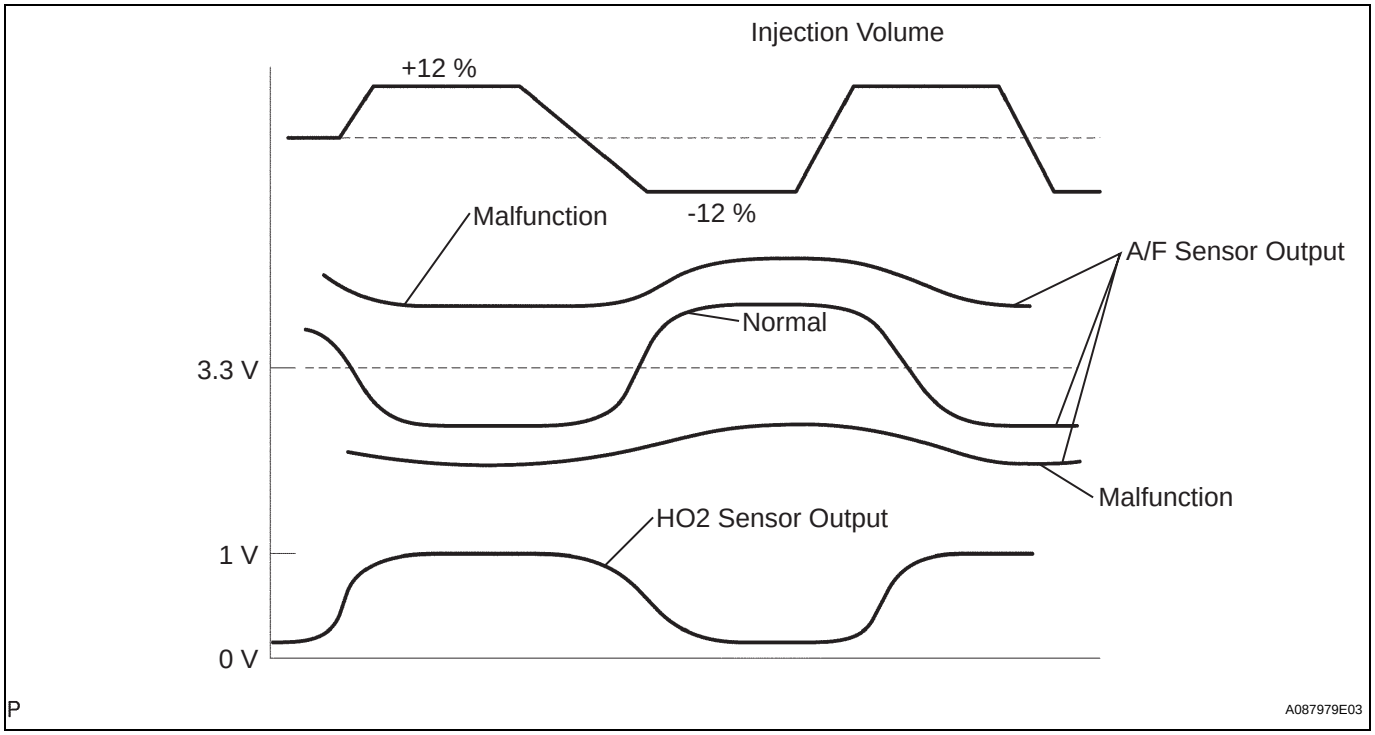

NG → **REPLACE AIR FUEL RATIO SENSOR**

OK

CHECK AND REPAIR EXTREMELY RICH OR LEAN ACTUAL AIR FUEL RATIO (INJECTOR, FUEL PRESSURE, GAS LEAKAGE FROM EXHAUST SYSTEM)

cardiagn.com

14 CHECK FOR EXHAUST GAS LEAK

OK:
No gas leakage.

NG → **REPAIR OR REPLACE EXHAUST GAS LEAKAGE POINT**

OK

15 INSPECT HEATED OXYGEN SENSOR (HEATER RESISTANCE)

Component Side:

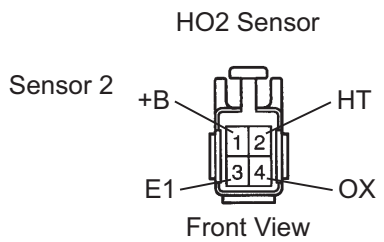

A084555E12

(a) Disconnect the H8 HO2 sensor connector.
(b) Measure the resistance between the terminals of the HO2 sensor connector.
Standard resistance

Tester Connections	Specified Conditions
HT (2) - +B (1)	Between 11 Ω and 16 Ω at 20°C (68°F)
HT (2) - E1 (3)	10 kΩ or higher

(c) Reconnect the HO2 sensor connector.

NG → **REPLACE HEATED OXYGEN SENSOR**

OK

16 INSPECT EFI RELAY

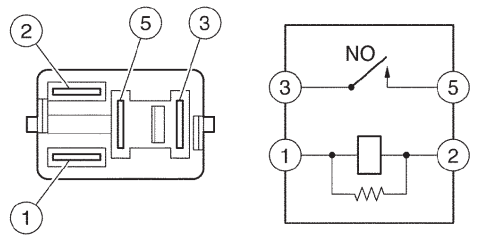

P

E034090

(a) Remove the EFI relay from the engine room R/B.
(b) Check the EFI relay resistance.
Standard resistance

Tester Connections	Specified Conditions
3 - 5	10 kΩ or higher
3 - 5	Below 1 Ω (when battery voltage applied to terminals 1 and 2)

(c) Reinstall the EFI relay.

NG → **REPLACE EFI RELAY**

OK

cardiagn.com

17 CHECK HARNESS AND CONNECTOR (HEATED OXYGEN SENSOR - ECM)

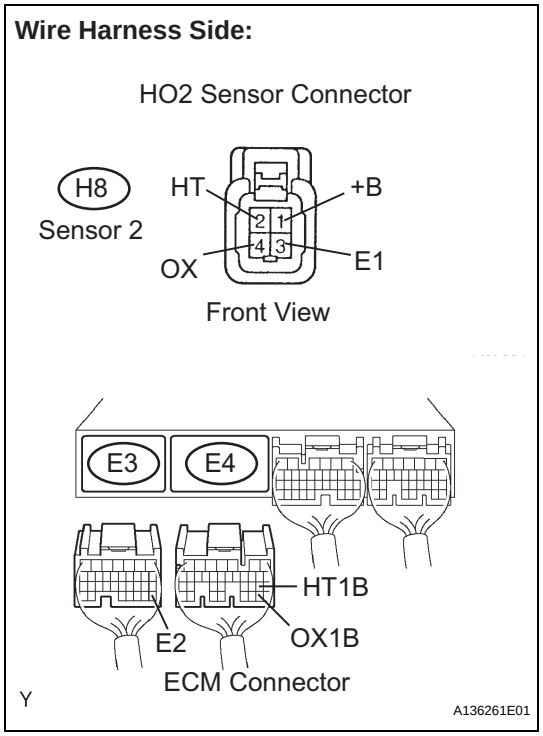

(a) Disconnect the H8 HO2 sensor connector.
(b) Turn the ignition switch to ON.
(c) Measure the voltage between the +B terminal of the HO2 sensor connector and body ground.

Standard voltage

Tester Connections	Specified Conditions
+B (H8-1) - Body ground	Between 9 V and 14 V

(d) Turn the ignition switch to OFF.
(e) Disconnect the E3 and E4 ECM connectors.
(f) Check the resistance.

Standard resistance (Check for open)

Tester Connections	Specified Conditions
HT (H8-2) - HT1B (E4-21)	Below 1 Ω
OX (H8-4) - OX1B (E4-29)	Below 1 Ω
E1 (H8-3) - E2 (E3-28)	Below 1 Ω

Standard resistance (Check for short)

Tester Connections	Specified Conditions
HT (H8-2) or HT1B (E4-21) - Body ground	10 kΩ or higher
OX (H8-4) or OX1B (E4-29) - Body ground	10 kΩ or higher
E1 (H8-3) or E2 (E3-28) - Body ground	10 kΩ or higher

(g) Reconnect the HO2 sensor connector.
(h) Reconnect the ECM connectors.

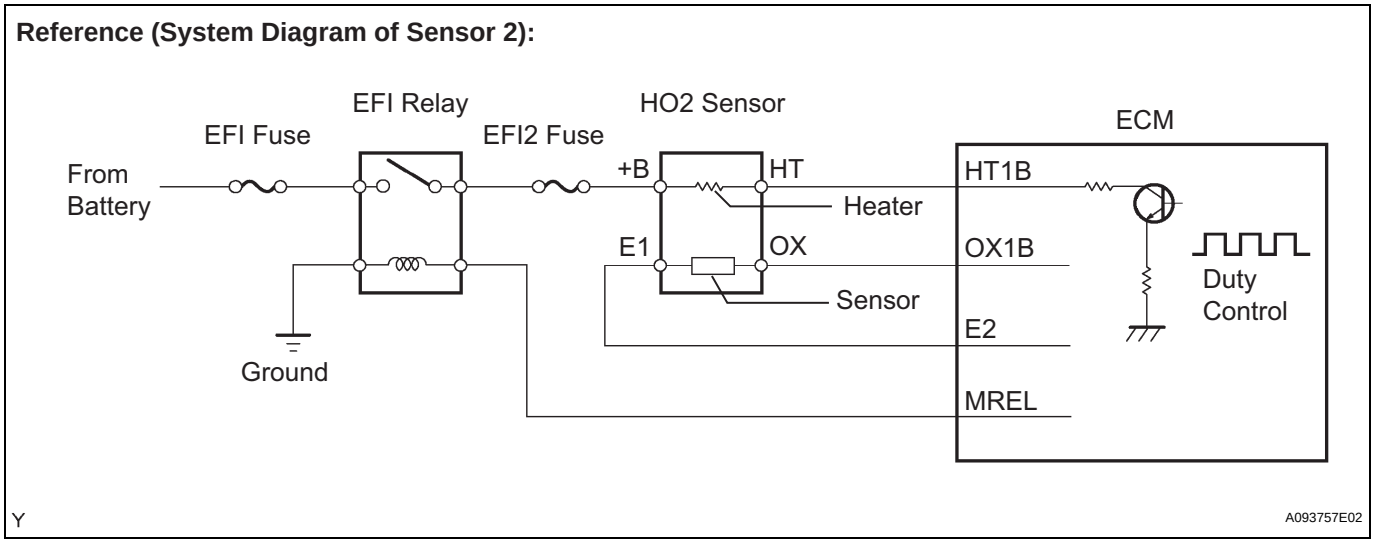

NG → **REPAIR OR REPLACE HARNESS OR CONNECTOR**

OK

REPLACE HEATED OXYGEN SENSOR

cardiagn.com

When Using OBD II Scan Tool:

1	CHECK DTC OUTPUT

(a) Connect an OBD II scan tool to the DLC3.
(b) Turn the ignition switch to ON and turn the scan tool ON.
(c) Read DTCs using the scan tool.

Result

Display (DTC Output)	Proceed to
P0138	A
P0137	B
P0136	C

B → **Go to step 14**

C → **Go to step 7**

A

2	READ VALUE OF OBD II SCAN TOOL (OUTPUT VOLTAGE OF HEATED OXYGEN SENSOR)

(a) Connect the OBD II scan tool to the DLC3.
(b) Turn the ignition switch to ON and turn the scan tool ON.
(c) Allow the engine to idle.
(d) Read the Heated Oxygen (HO2) sensor output voltage while idling using the scan tool.

Result

HO2 Sensor Output Voltages	Proceed to
More than 1.2 V	A
Less than 1.0 V	B

B → **Go to step 5**

A

3	CHECK HARNESS AND CONNECTOR

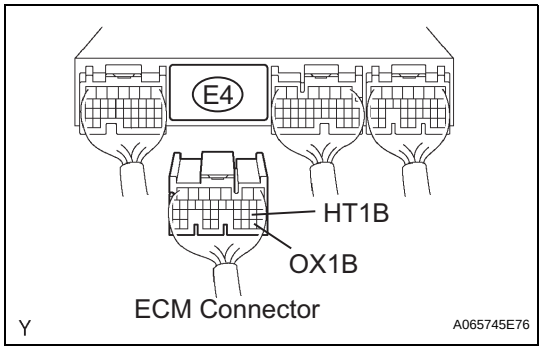

(a) Turn the ignition switch to OFF and wait for 5 minutes.
(b) Disconnect the E4 ECM connector.
(c) Check the resistance.
Standard resistance

Tester Connections	Specified Conditions
HT1B (E4-21) - OX1B (E4-29)	10 kΩ or higher

(d) Reconnect the ECM connector.

OK → **REPLACE ECM**

NG

cardiagn.com

4 INSPECT HEATED OXYGEN SENSOR (CHECK FOR SHORT)

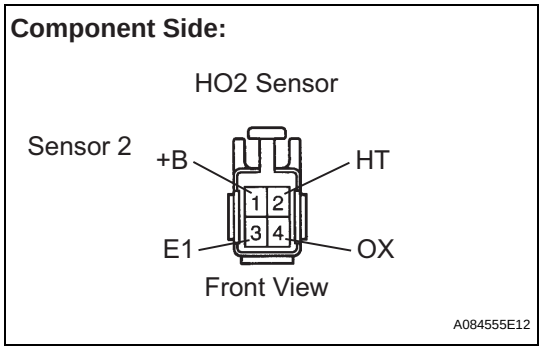

(a) Disconnect the H8 HO2 sensor connector.
(b) Check the resistance.
Standard resistance

Tester Connections	Specified Conditions
+B (1) - E1 (3)	10 kΩ or higher
+B (1) - OX (4)	10 kΩ or higher

(c) Reconnect the HO2 sensor connector.

NG → **REPLACE HEATED OXYGEN SENSOR**

OK

REPAIR OR REPLACE HARNESS OR CONNECTOR

5 PERFORM CONFIRMATION DRIVING PATTERN

NEXT

6 CHECK WHETHER DTC OUTPUT RECURS (DTC P0138)

(a) Read DTCs using the OBD II scan tool.

Result

Display (DTC Output)	Proceed to
P0138	A
No output	B

B → **CHECK FOR INTERMITTENT PROBLEMS**

A

REPLACE HEATED OXYGEN SENSOR

7 READ VALUE OF OBD II SCAN TOOL (OUTPUT VOLTAGE OF HEATED OXYGEN SENSOR)

(a) Connect the OBD II scan tool to the DLC3.
(b) Turn the ignition switch to ON and turn the scan tool ON.
(c) Start the engine.
(d) After warming up the engine, run the engine at an engine speed of 2,500 rpm for 3 minutes.
(e) Read the output voltage of the HO2 sensor when the engine rpm is suddenly increased.

cardiagn.com

HINT:
Quickly accelerate the engine to 4,000 rpm 3 times using the accelerator pedal.
Standard voltage:
Fluctuates between 0.4 V or less and 0.5 V or more.

NG → **Go to step 14**

OK

8	PERFORM CONFIRMATION DRIVING PATTERN

ES

NEXT

9	CHECK WHETHER DTC OUTPUT RECURS (P0136)

(a) Read DTCs using the OBD II scan tool.

Result

Display (DTC Output)	Proceed to
P0136	A
No output	B

B → **CHECK FOR INTERMITTENT PROBLEMS**

A

10	REPLACE HEATED OXYGEN SENSOR

(a) Replace the heated oxygen sensor (See page EX-2).

NEXT

11	PERFORM CONFIRMATION DRIVING PATTERN

NEXT

12	CHECK WHETHER DTC OUTPUT RECURS (DTC P0136)

(a) Read DTCs using the OBD II scan tool.

Result

Display (DTC Output)	Proceed to
P0136	A
No output	B

B → **REPAIR COMPLETED**

A

cardiagn.com

13	READ VALUE OF OBD II SCAN TOOL (OUTPUT VOLTAGE OF A/F SENSOR)

(a) Connect the OBD II scan tool to the DLC3.
(b) Start the engine and turn the scan tool ON.
(c) Warm up the Air-Fuel Ratio (A/F) sensor at an engine speed of 2,500 rpm for 90 seconds.
(d) Using the scan tool, check the A/F sensor voltage 3 times, once when the engine is in each of the following conditions:
  (1) While idling (check for at least 30 seconds) (Step 1)
  (2) At an engine speed of approximately 2,500 rpm (without any sudden changes in engine speed) (Step 2)
  (3) Raise the engine speed to 4,000 rpm and then quickly release the accelerator pedal so that the throttle valve is fully closed (Step 3).

Standard voltage

Conditions	A/F Sensor Voltage Variations	Reference
Steps (1) and (2)	Changes at approx. 0.66 V	Between 0.62 V and 0.7 V
Step (3)	Increases to 0.76 V or more	This occurs during engine deceleration (when fuel-cut performed)

For more information, see the diagrams below.

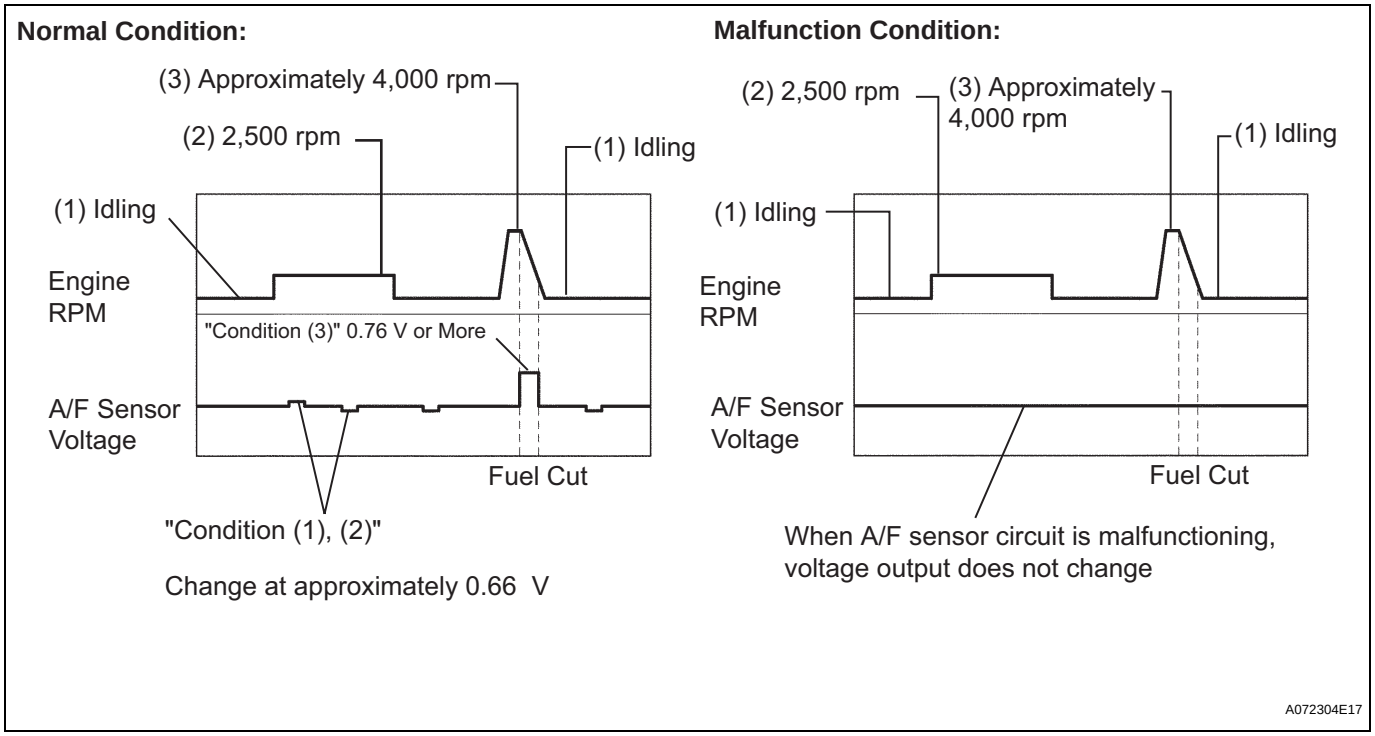

HINT:
- If the output voltage of the A/F sensor remains at approximately 0.66 V (see Malfunction Condition diagram) under any conditions, including those above, the A/F sensor may have an open circuit. (This will also happen if the A/F sensor heater has an open circuit.)

cardiagn.com

ES

- If the output voltage of the A/F sensor remains at either approximately 0.76 V or more, or 0.56 V or less (see Malfunction Condition diagram) under any conditions, including those above, the A/F sensor may have a short circuit.
- The ECM stops fuel injection (fuel cut) during engine deceleration. This causes a lean condition and results in a momentary increase in the A/F sensor output voltage.
- The ECM must establish a closed throttle valve position learning value to perform fuel cut. If the battery terminal has been reconnected, the vehicle must be driven over 10 mph (16 km/h) to allow the ECM to learn the closed throttle valve position.
- When the vehicle is driven: The output voltage of the A/F sensor may be below 0.56 V during fuel enrichment. For the vehicle, this translates to a sudden increase in speed with the accelerator pedal fully depressed when trying to overtake another vehicle. The A/F sensor is functioning normally.
- The A/F sensor is a current output element; therefore, the current is converted into a voltage inside the ECM. Measuring the voltage at the connectors of the A/F sensor or ECM will show a constant voltage result.

NG → **REPLACE AIR FUEL RATIO SENSOR**

OK

CHECK AND REPAIR EXTREMELY RICH OR LEAN ACTUAL AIR FUEL RATIO (INJECTOR, FUEL PRESSURE, GAS LEAKAGE FROM EXHAUST SYSTEM)

14	CHECK FOR EXHAUST GAS LEAK

OK:
No gas leakage.

NG → **REPAIR OR REPLACE EXHAUST GAS LEAKAGE POINT**

OK

cardiagn.com

15 INSPECT HEATED OXYGEN SENSOR (HEATER RESISTANCE)

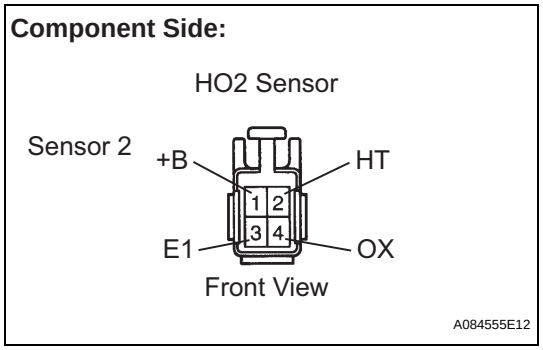

(a) Disconnect the H8 HO2 sensor connector.
(b) Measure the resistance between the terminals of the HO2 sensor connector.
Standard resistance

Tester Connections	Specified Conditions
HT (2) - +B (1)	Between 11 Ω and 16 Ω at 20°C (68°F)
HT (2) - E1 (3)	10 kΩ or higher

(c) Reconnect the HO2 sensor connector.

NG → **REPLACE HEATED OXYGEN SENSOR**

OK

16 INSPECT EFI RELAY

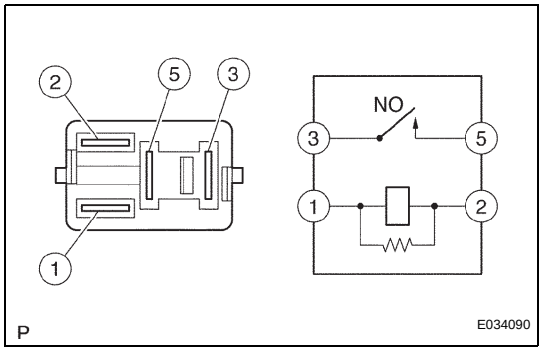

(a) Remove the EFI relay from the engine room R/B.
(b) Check the EFI relay resistance.
Standard resistance

Tester Connections	Specified Conditions
3 - 5	10 kΩ or higher
3 - 5	Below 1 Ω (when battery voltage applied to terminals 1 and 2)

(c) Reinstall the EFI relay.

NG → **REPLACE EFI RELAY**

OK

ES

cardiagn.com

17	CHECK HARNESS AND CONNECTOR (HEATED OXYGEN SENSOR - ECM)

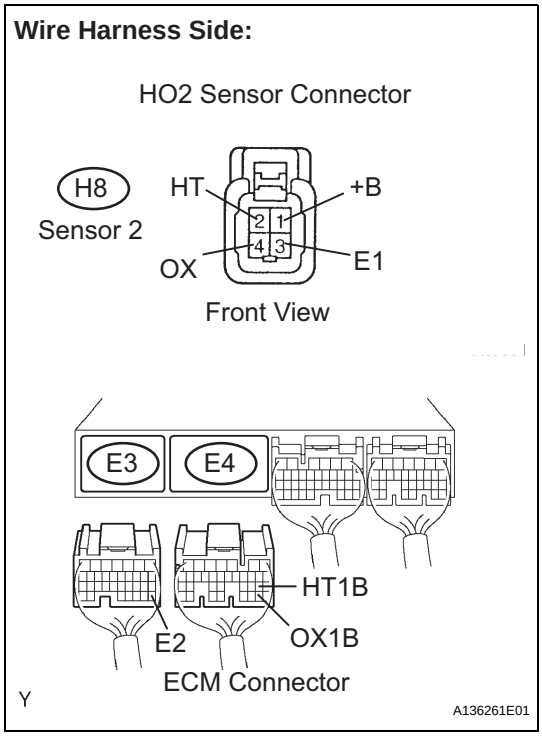

(a) Disconnect the H8 HO2 sensor connector.
(b) Turn the ignition switch to ON.
(c) Measure the voltage between the +B terminal of the HO2 sensor connector and body ground.

Standard voltage

Tester Connections	Specified Conditions
+B (H8-1) - Body ground	Between 9 V and 14 V

(d) Turn the ignition switch to OFF.
(e) Disconnect the E3 and E4 ECM connectors.
(f) Check the resistance.

Standard resistance (Check for open)

Tester Connections	Specified Conditions
HT (H8-2) - HT1B (E4-21)	Below 1 Ω
OX (H8-4) - OX1B (E4-29)	Below 1 Ω
E1 (H8-3) - E2 (E3-28)	Below 1 Ω

Standard resistance (Check for short)

Tester Connections	Specified Conditions
HT (H8-2) or HT1B (E4-21) - Body ground	10 kΩ or higher
OX (H8-4) or OX1B (E4-29) - Body ground	10 kΩ or higher
E1 (H8-3) or E2 (E3-28) - Body ground	10 kΩ or higher

(g) Reconnect the HO2 sensor connector.
(h) Reconnect the ECM connectors.

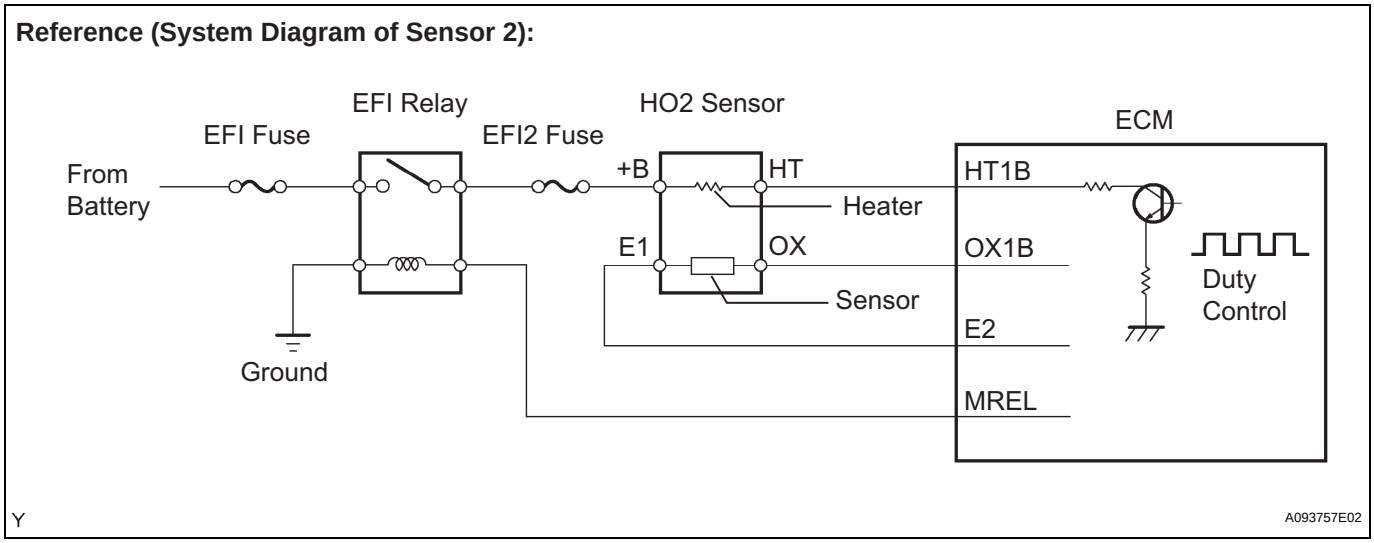

NG → **REPAIR OR REPLACE HARNESS OR CONNECTOR**

OK

REPLACE HEATED OXYGEN SENSOR

cardiagn.com